Rev.	Description	Initiator	Date
03	Modify Mounting Side tap depth to be 6.5mm	JW	12/13/2012

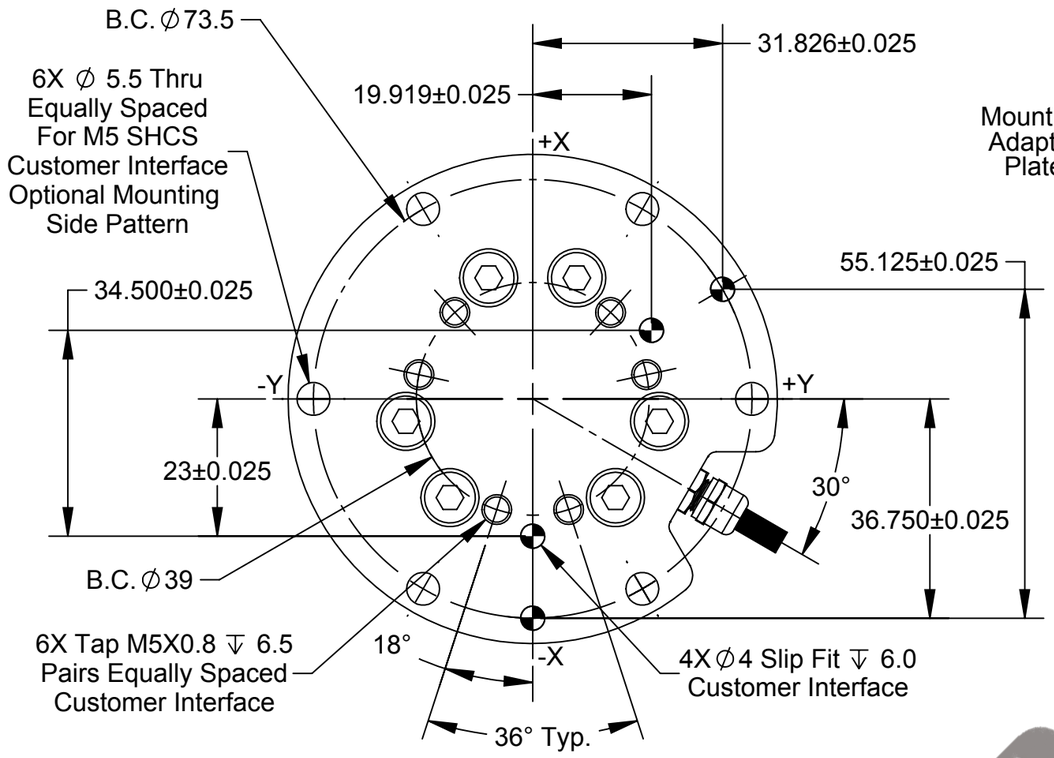

MOUNTING SIDE

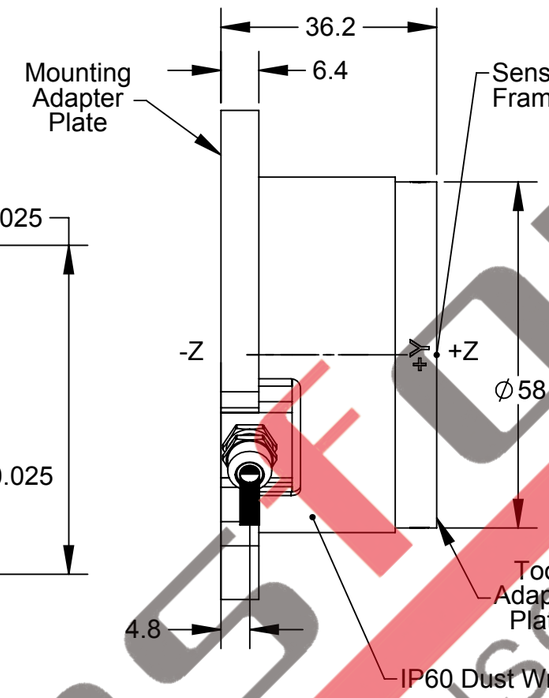

SIDE VIEW

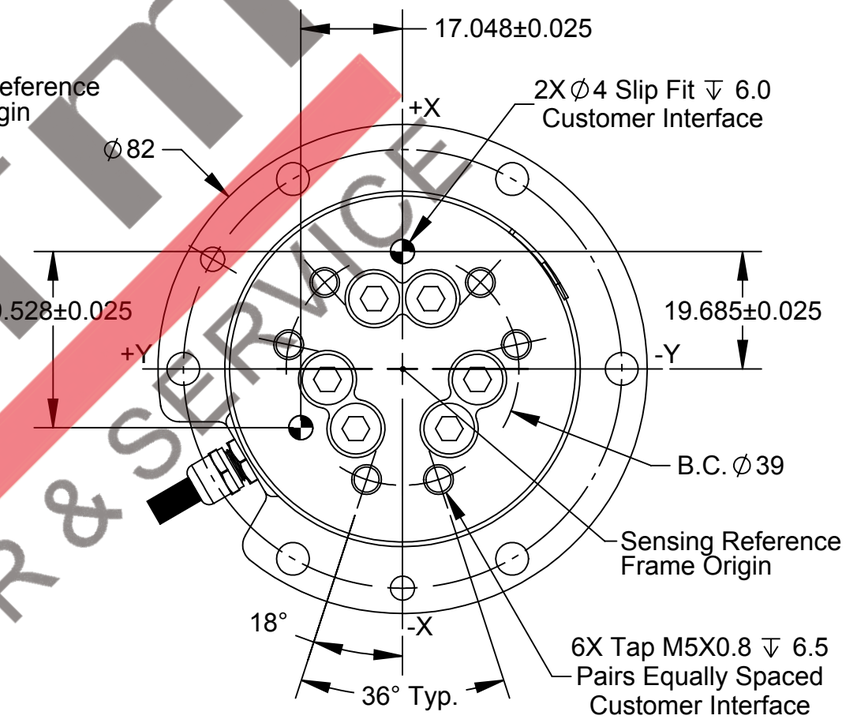

TOOL SIDE

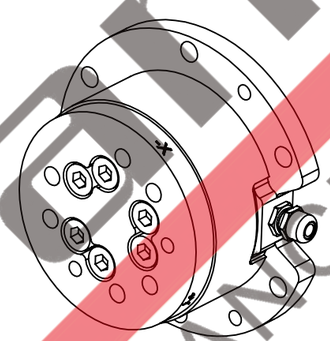

ISOMETRIC VIEW

Notes:

1. Material: Mounting and Tool Adapter made of Aluminum, Transducer made of hardened Stainless Steel.
2. **WARNING: DO NOT LOOSEN OR REMOVE INTERFACE PLATES OR CABLE FITTING DUE TO POTENTIAL DAMAGE.**
3. Standard connector (not shown) has 17mm diameter and is 67.5mm long.

NOTES: UNLESS OTHERWISE SPECIFIED.

DO NOT SCALE DRAWING. ALL DIMENSIONS ARE IN MILLIMETERS.

3rd ANGLE PROJECTION

ATI INDUSTRIAL AUTOMATION

1031 Goodworth Drive, Apex, NC 27539, USA
Tel: +1.919.772.0115 Email: info@ati-ia.com
Fax: +1.919.772.8259 www.ati-ia.com
ISO 9001 Registered Company

PROPERTY OF ATI INDUSTRIAL AUTOMATION, INC. NOT TO BE REPRODUCED IN ANY MANNER EXCEPT ON ORDER OR WITH PRIOR WRITTEN AUTHORIZATION OF ATI.

DRAWN BY: J. Walser 10/15/2012

CHECKED BY: P. Fusco 10/15/2012

PROJECT # 121009-1 SHEET 1 OF 1

TITLE: Radial Exit Mini58 Transducer, IP60

SCALE	SIZE	DRAWING NUMBER	REVISION
1:1	B	9230-05-1437	03

Transform ADVANCED SENSOR & SERVICE